Surge Protection

For comprehensive protection of a luminaire against electrical surges, surge protection shall be installed on the mains supply where required to protect luminaires and drivers from transient voltage damage.

For warranty information visit unios.com/warranty

Please read these installation instructions carefully before installing this luminaire. This product must be installed and maintained by a suitably qualified person/s in compliance with the latest applicable regulations and relevant legislation.

Unios does not warrant any claim based on defects or damage caused by misuse, improper installation, improper operation and/or modifications carried out by the purchaser or third parties. This luminaire will not be used as a 'Working light' during construction. This will result in the warranty of the luminaire to be void. For warranty duration, please refer to the data sheet.

Parts

2x Mounting Clips (per metre)

2x Mounting Screws (per metre)

2x End Caps (per metre)

2x Wing Nuts

Additional Accessories

Rubber Roller Tool (*EC001*)

Rubber Roller Tool

Rubber Roller Tool (EC001) has two roller sizes to accommodate 5mm and 10mm strip.

5mm Side: Suitable for 5mm strip

10mm Side: Suitable for 10mm strip

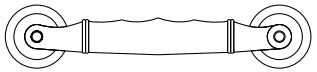

Corrosion Protection

It is important to note that care must be taken during installation or maintenance to ensure that the surface of the luminaire is not damaged. Any damage, which is exposed to moisture will result in corrosion occurring.

Please also note that any chemical applications on the luminaire or chemical contact via installation will cause corrosion of the surface of the luminaire and will void the warranty.

Ambient Conditions

Recommended to install in an ambient temperature <35°C.

Disposal

Ensure correct disposal of this product (waste electrical and electronic equipment).

Inter Linear Light

COVE INSTALLATION

Base Codes	Inter Cove CR100 CR100				IP20
Class III 24V DC	Material Aluminium	Cable Length 1000mm	Install Person/s 1		Power 5 ~ 20 Watts

CAUTION – This product must be installed by a qualified installer

Please read instruction manual carefully before installing luminaire

ESD Protection

When Handling this product, care must be taken so that the LED strip is not damaged. Damage due to inappropriate handling is not covered by warranty.

The following precautions **must** be taken:

- Ensure device is switched off and disconnected from power supply.
- During assembly/disassembly, care must be taken during handling of LED strip.
- Always ensure to discharge yourself of all charge by touching a grounded bare metal surface or approved anti-static mat before working on device.

CAUTION
Contains parts and assemblies susceptible to damage by electrostatic discharge (ESD)

Inter Cove CR100

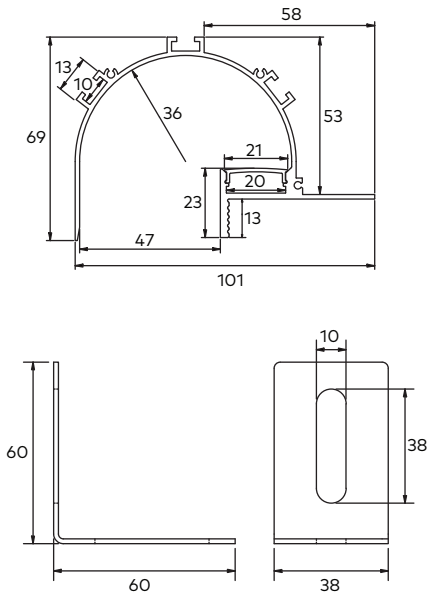

Finishing Details

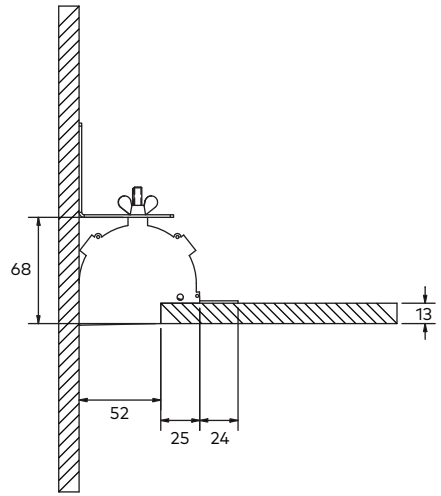

CAUTION

The following outlines practices that should be avoided.

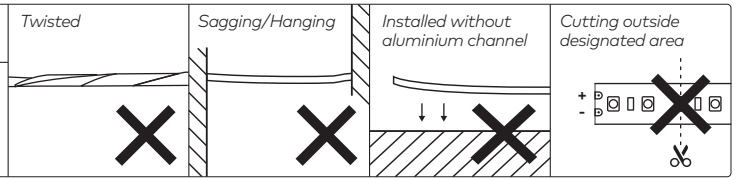

Profile Preparation

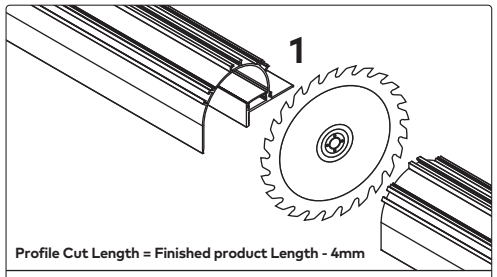

Profile Cut Length = Finished product Length - 4mm

Cut profile to required length. Allow for 2x 2mm endcaps when measuring for finished length. Ensure to use a saw blade made for cutting aluminium.

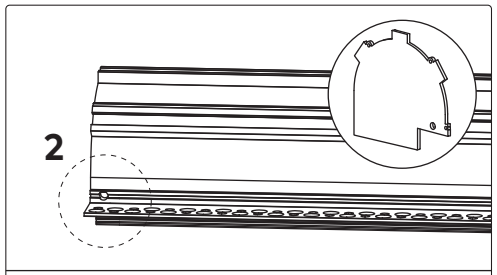

Drill cable entry hole in desired location. Ensure to remove all burrs after drilling. For end entry requirements, an endcap with a hole has been provided.

Strip Mounting

IMPORTANT: *Refer to ESD Protection Section located on page 1 before mounting strip.*

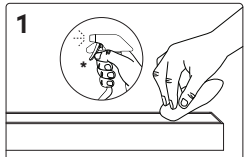

Ensure to clean the surface

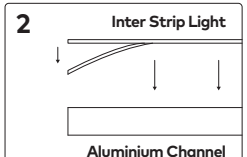

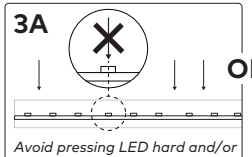

Avoid pressing LED hard and/or sliding fingers across strip.

OR

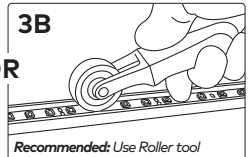

Recommended: *Use Roller tool to to reduce the risk of ESD damage.*

***Recommended cleaning products:** Wax and grease remover, methylated spirits, isopropyl alcohol or surface cleaners.

Profile Assembly

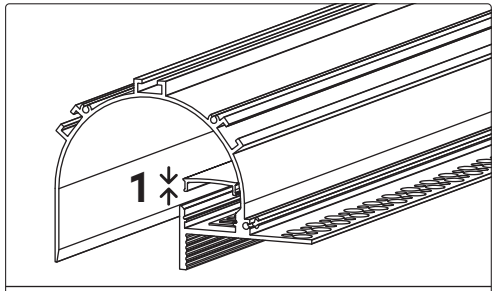

Install diffuser into profile. Handle with care to avoid damage to diffuser during installation.

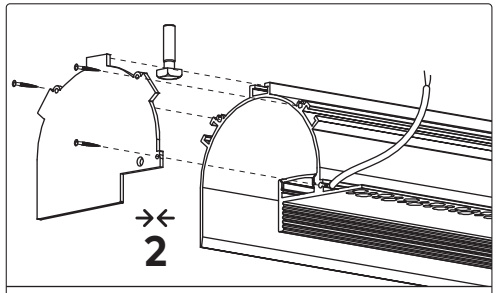

Slide in mounting bolts and install endcaps. Feed cable through hole of endcap or predrilled hole.

Profile Installation

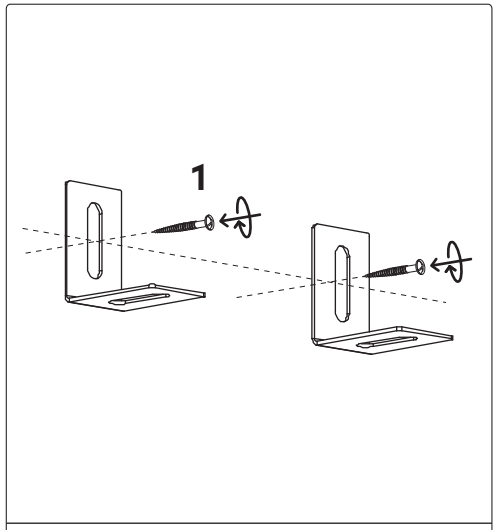

Mark out and install mounting brackets on wall (2 mounting brackets per m of profile are provided). Consider height of profile and finished ceiling height when installing the brackets.

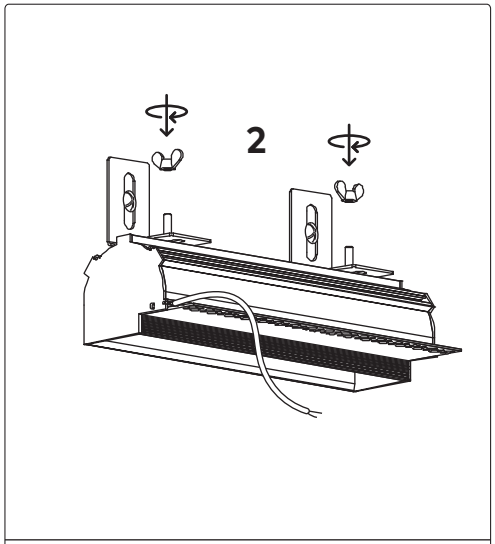

Attach CR100 profile to the mounting brackets with provided wing nuts ensuring profile is pushed up against the wall tightly.

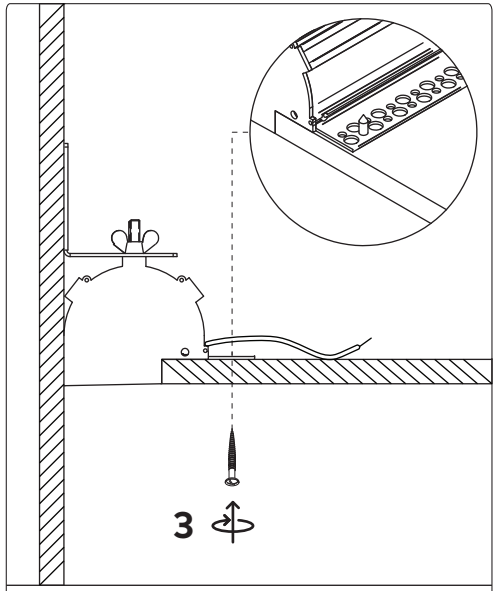

Install ceiling surface to CR100 profile with screws ensuring the screws grip into holes in the profile.

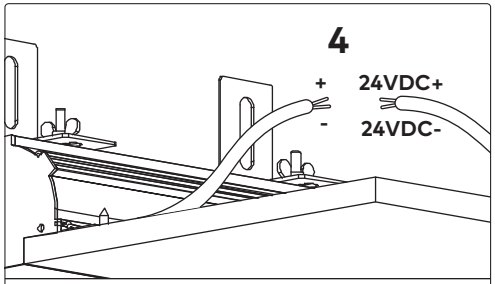

Make electrical connections matching polarity.

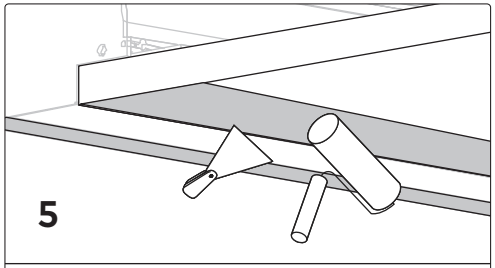

Apply plaster to the joinery areas to blend it seamlessly into the ceiling and wall surface. Paint over surface once fully cured.